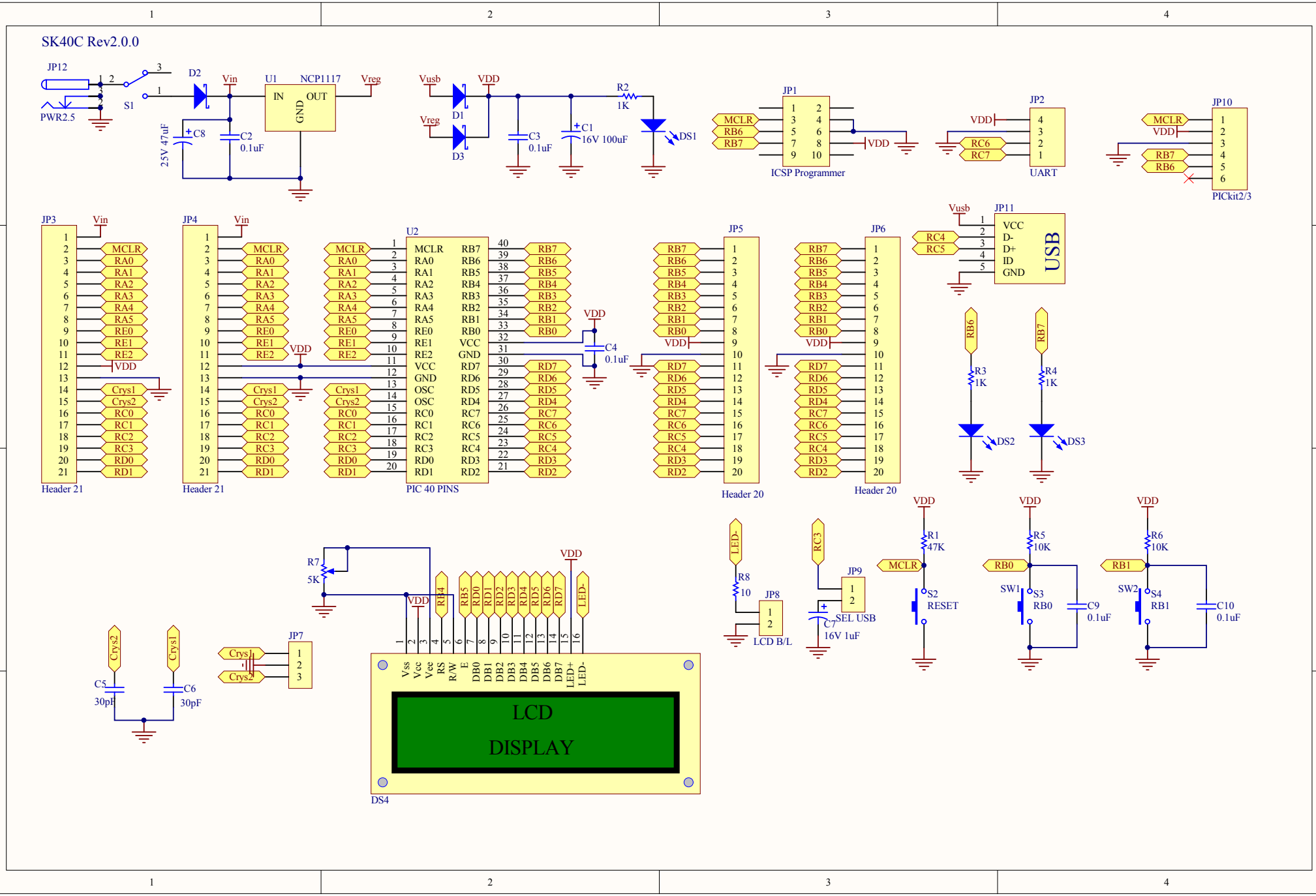
SK40C Rev2.0.0
JP12
PWR2.5
S1
D2
Vin
U1
NCP1117
IN
OUT
GND
Vreg
C8
25V 47uF
C2
0.1uF
Vusb
VDD
D1
D3
C3
0.1uF
C1
16V 100uF
R2
1K
DS1
JP1
MCLR
RB6
RB7
ICSP Programmer
JP2
RC6
RC7
UART
JP10
PICkit2/3
JP3
Header 21
JP4
Header 21
U2
PIC 40 PINS
JP5
Header 20
JP6
Header 20
JP11
VCC
D-
D+
ID
GND
USB
RC4
RC5
C4
0.1uF
R3
1K
R4
1K
DS2
DS3
R7
5K
JP7
Crys1
Crys2
C5
30pF
C6
30pF
DS4
LCD
DISPLAY
Vss
Vcc
Vee
RS
R/W
E
DB0
DB1
DB2
DB3
DB4
DB5
DB6
DB7
LED+
LED-
LED-
R8
10
JP8
LCD B/L
RC3
JP9
SEL USB
C7
16V 1uF
R1
47K
S2
RESET
R5
10K
SW1
S3
RB0
C9
0.1uF
R6
10K
SW2
S4
RB1
C10
0.1uF